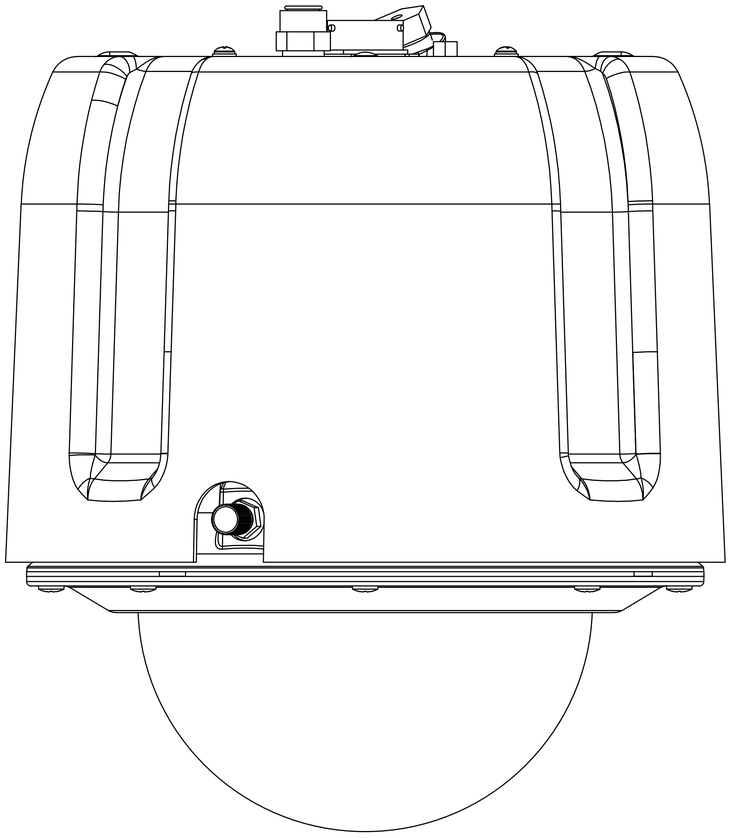

ELEVATION VIEW

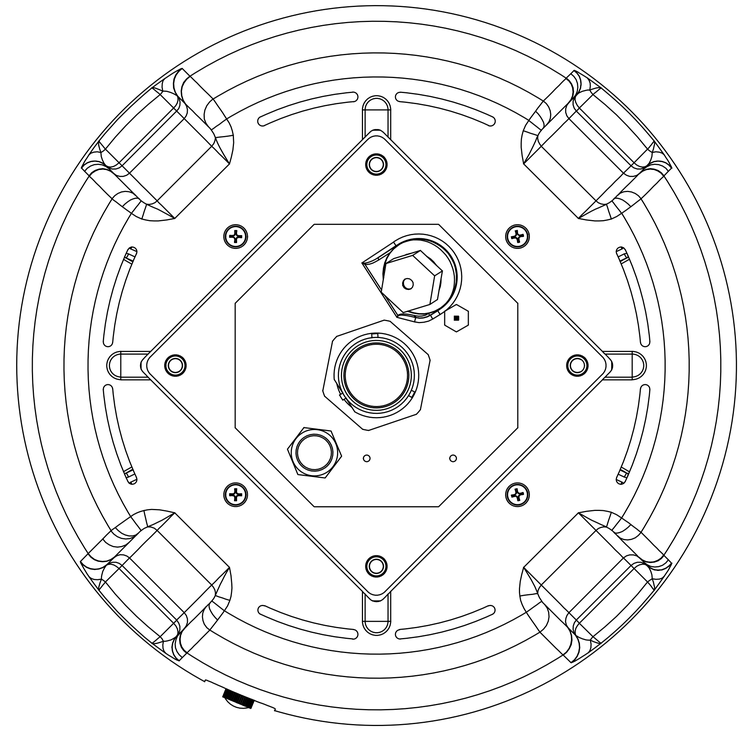

TOP PLAN VIEW

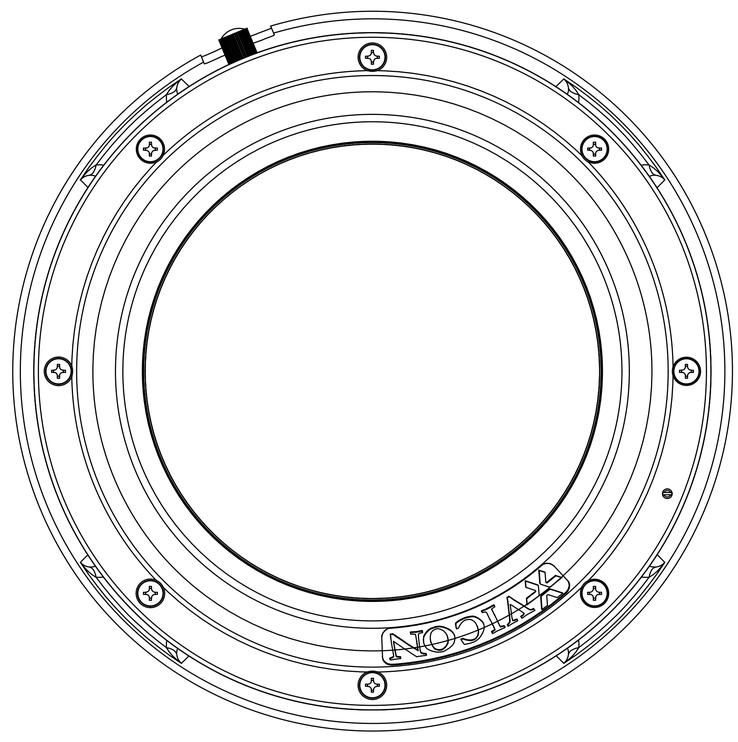

BOTTOM PLAN VIEW

SVFT-PRS / SURV HD-PRS OUTLINE

MSF
10/10/11

SCALE:1/1