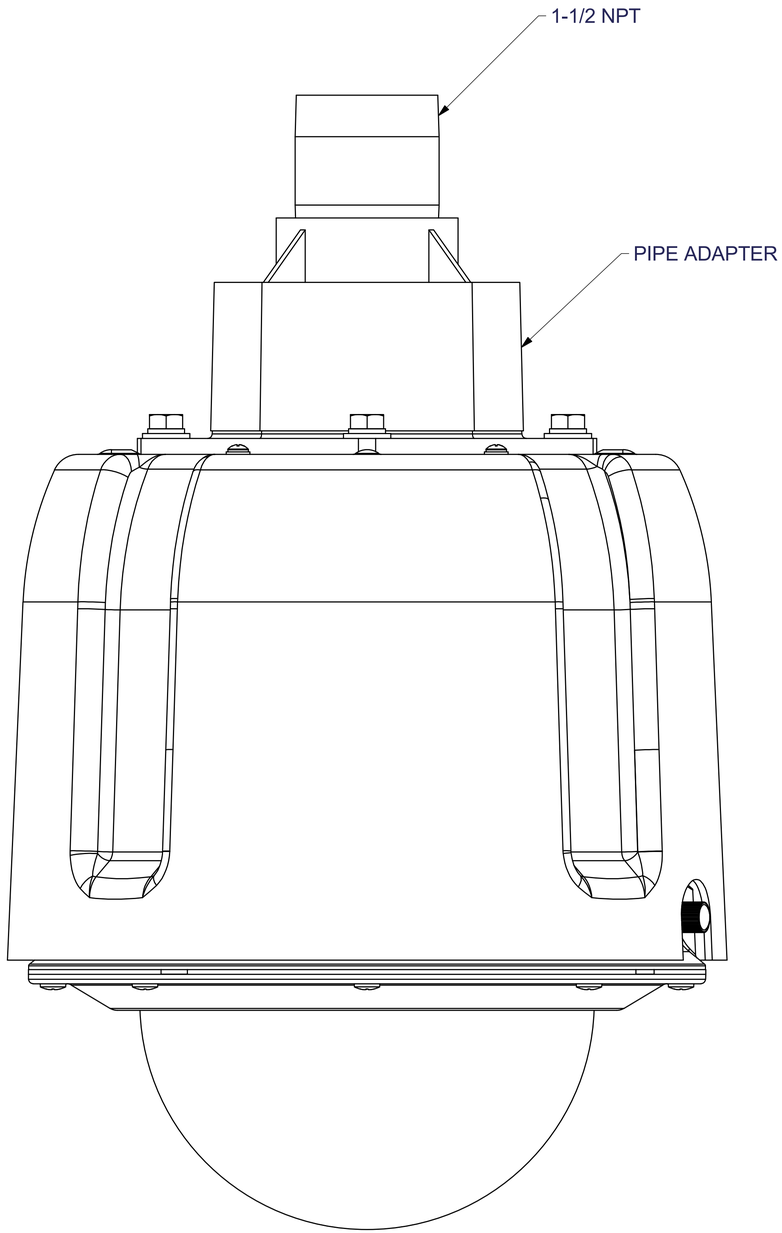

ELEVATION VIEW

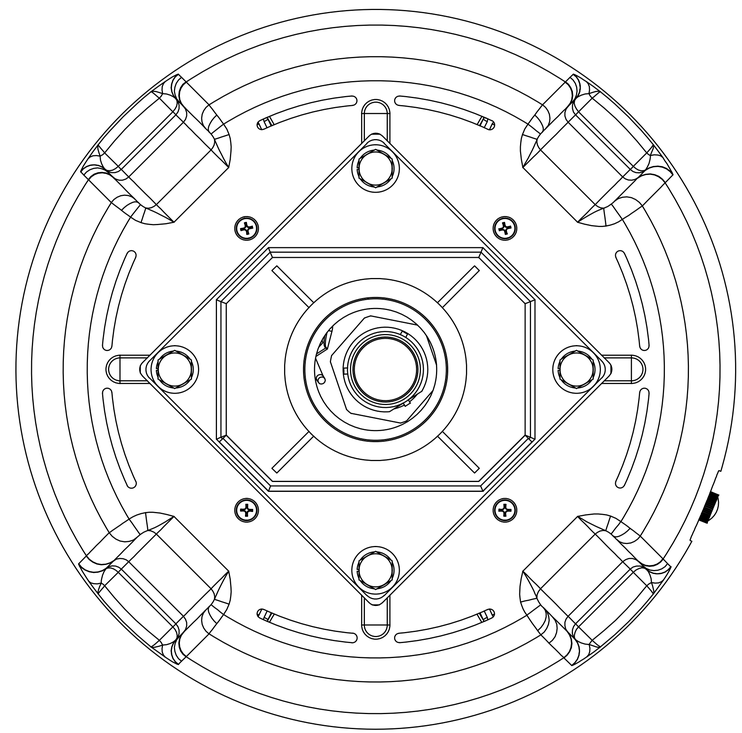

TOP PLAN VIEW

SVFT-PRS / SURV HD-PRS WITH PIPE ADAPTER

MSF
10/10/11

SCALE: 1/1