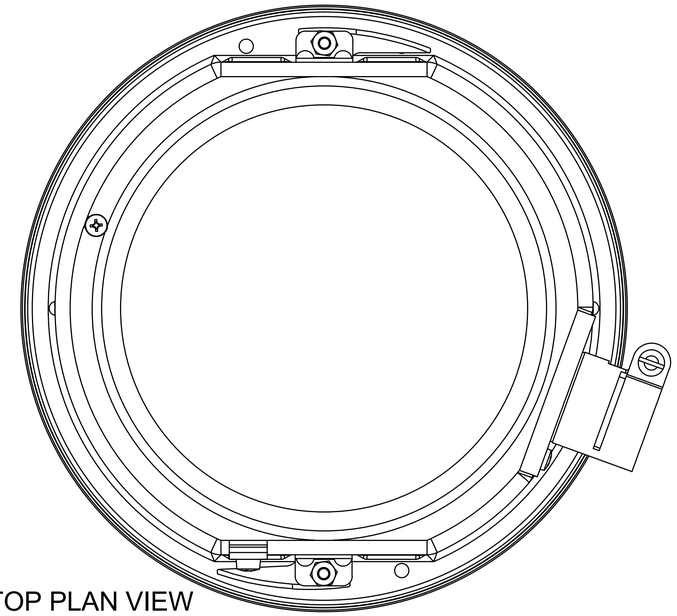

TOP PLAN VIEW

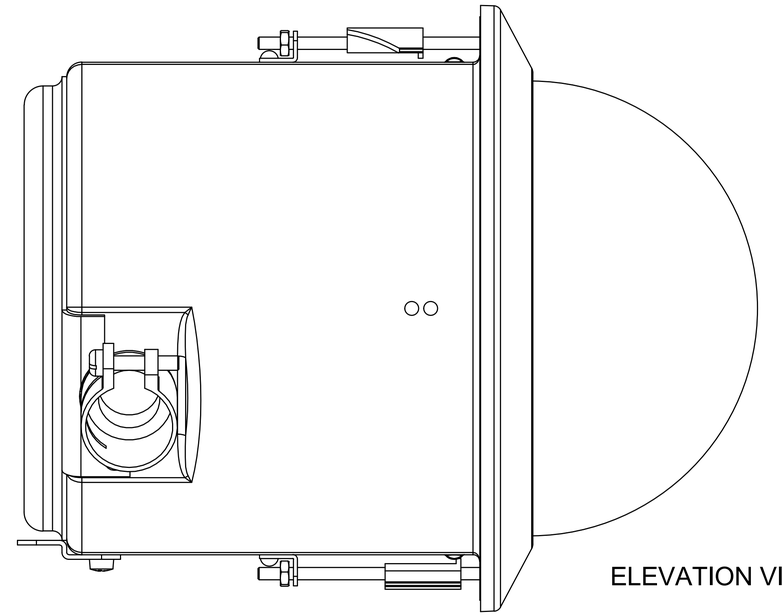

ELEVATION VIEW

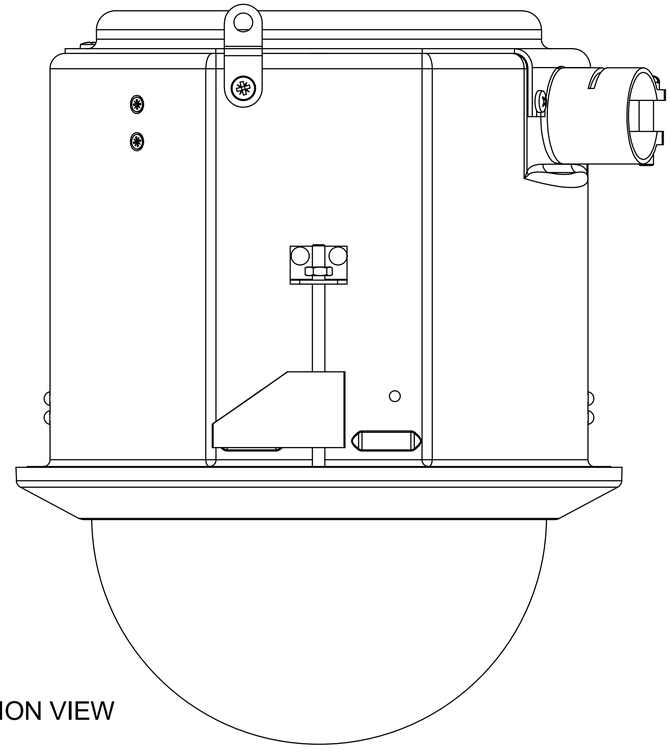

ELEVATION VIEW

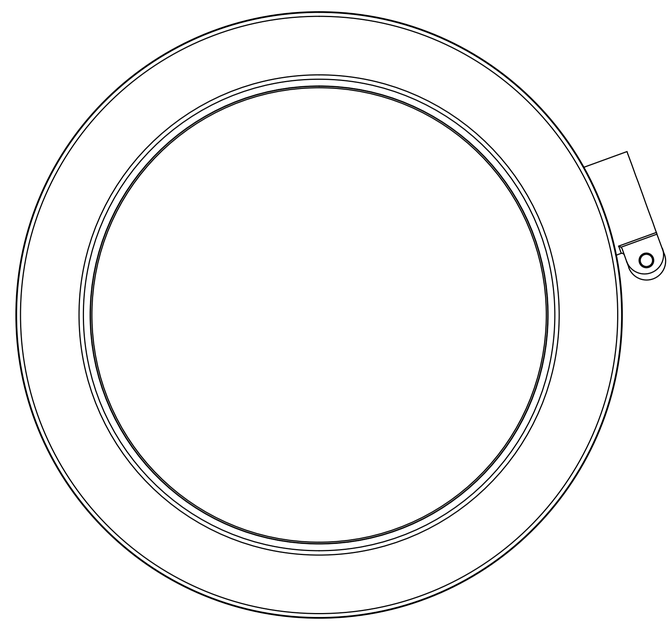

TOP PLAN VIEW

SVFT / SURV HD
IN-CEILING OUTLINE

MSF
10/10/11

SCALE: 1/1